HL - 360 A

HL - 360A

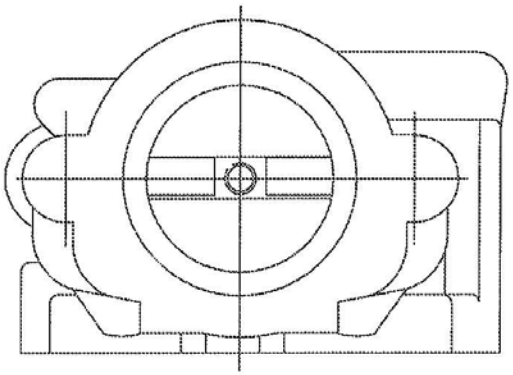

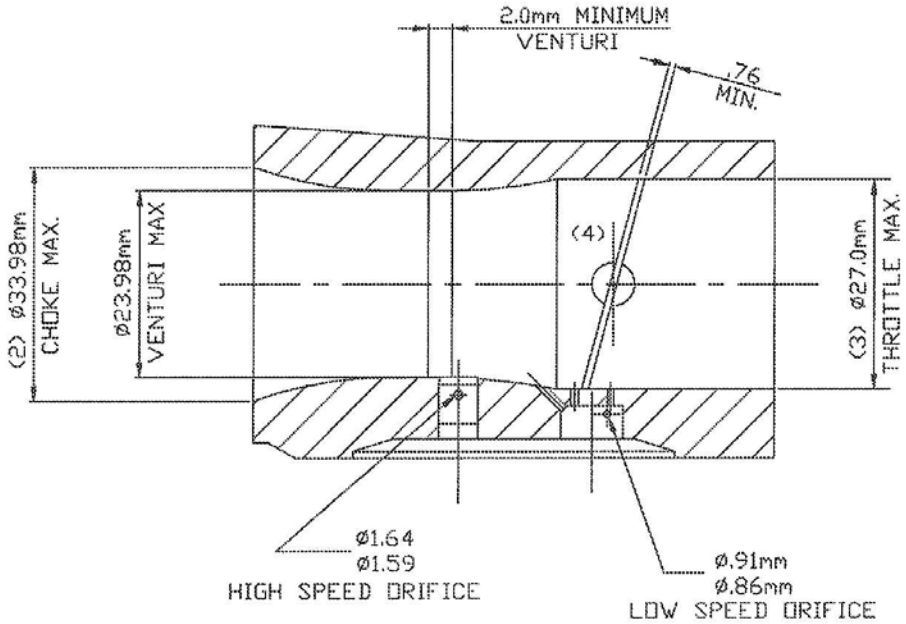

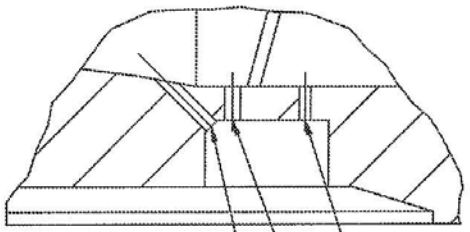

ø1.21mm
ø1.16mm

2ND ø1.21mm
ø1.16mm

1ST ø.86mm
ø.81mm

NOTES:

ALL ALTERATIONS TO BE MADE ON AutoCAD

COORDINATE CHANGE WITH

DO NOT SCALE DRAWING

THIS DRAWING PREPARED IN ACCORDANCE WITH ANSI Y 14.5 - 1973

APPR.	DATE
APPR.	DATE
CHECKED	DATE
DRAWN RAB	DATE 26/3/2008
SCALE 2 to 1	E.W.R.
PROJECT - EXPERIMENTAL NO.	

CHL	ZONE	E.C.R.	DESCRIPTION	DATE	BY	CK.

REVISIONS

CUSTOMER NAME PART NO. - REV.

HL

MATERIAL AND HEAT TREAT

FINISH

Tillotson.

TILLOTSON LTD.
CLASH INDUSTRIAL ESTATE,
TRALEE, CO. KERRY.

TITLE

INSPECTION DIMENSIONS

DWG. NO. HL - 360 A

SHEET 1 OF 1